Galactica Media: Journal of Media Studies. 2024. No 4 | ISSN: 2658-7734
Новые медиа и коммуникации | https://doi.org/10.46539/gmd.v6i4.499

The Role of Emotional Attachment in the Impact of Generation Z's Trust in Digital Influencers on Unplanned Purchase Behavior

Alper Ateş[1] (a), Halil Sunar[2] (b), & Bilal Erdem[3] (a)

(a) Selçuk University. Konya, Turkey.

(b) Giresun University. Giresun, Turkey

Received: 2 April 2024 | Revised: 28 June 2024 | Accepted: 6 July 2024

Abstract

By 2024, the global Internet user base is expected to reach 5.5 billion, with 94% actively engaging on social media platforms. Marketing managers increasingly employ strategies involving key opinion leaders to connect with Generation Z, a demographic known for its digital fluency and reliance on social networks. This study utilizes a qualitative approach to investigate how emotional attachment impacts Generation Z consumers' trust in social media figures and its effect on impulsive buying behavior. It contributes to the body of knowledge on digital marketing by identifying factors that enhance the effectiveness of social media personalities in reaching and persuading Generation Z audiences.

The findings provide actionable insights for content creators aiming to expand their following and for businesses seeking to strengthen their credibility and drive consumer purchasing decisions through collaboration with digital creators. The results reveal that emotional attachment to online personalities is a crucial driver of trust among Generation Z, significantly affecting their unplanned purchasing habits. Additionally, emotional connection acts as a catalyst, amplifying the impact of trust on spontaneous buying tendencies.

Although trust in social media figures has a notable effect on unplanned purchasing, the relatively weak correlation underscores the need for further exploration of additional factors influencing Generation Z's decision-making processes.

Keywords

Digital Influencer; Digital Follower; Generation Z; Social Media; Emotional Attachment; Unplanned Purchase Behavior; Impulse Buying; Influencer Marketing; Consumers; Trust

This work is licensed under a Creative Commons "Attribution" 4.0 International License

1 Email: alpera[at]selcuk.edu.tr ORCID https://orcid.org/0000-0002-4347-7306
2 Email: halil.sunar[at]windowslive.com ORCID https://orcid.org/0000-0002-5131-4056
3 Email: bilalerdem[at]selcuk.edu.tr ORCID https://orcid.org/0000-0002-2026-1334

Galactica Media: Journal of Media Studies. 2024. No 4 | ISSN: 2658-7734
New Media and Human Communication | https://doi.org/10.46539/gmd.v6i4.499

Эмоциональная привязанность как фактор доверия поколения Z к цифровым инфлюенсерам и его влияние на импульсивные покупки

Атеш Альпер[1] (a), Сунар Халил[2] (b), Эрдем Билал[3] (a)

(a) Университет Сельчук. Конья, Турция

(b) Университет Гиресун. Гиресун, Турция

Рукопись получена: 2 апреля 2024 | Пересмотрена: 28 июня 2024 | Принята: 6 июля 2024

Аннотация

К 2024 году глобальная база интернет-пользователей, как ожидается, достигнет 5,5 миллиарда человек, из которых 94% будут активно использовать социальные сети. Менеджеры по маркетингу всё чаще обращаются к стратегиям сотрудничества с лидерами мнений для взаимодействия с поколением Z — аудиторией, отличающейся высокой цифровой грамотностью и зависимостью от социальных платформ. В данном исследовании применяется качественный подход для анализа того, как эмоциональная привязанность влияет на доверие потребителей поколения Z по отношению к интернет-персонам и их импульсивное покупательское поведение. Работа дополняет научные знания в области цифрового маркетинга, выявляя ключевые факторы, способствующие успеху цифровых лидеров в обращении к аудитории поколения Z.

Полученные результаты предоставляют полезные рекомендации как для создателей контента, стремящихся увеличить свою аудиторию, так и для компаний, работающих над укреплением репутации и стимулированием покупательской активности через партнёрство с онлайн-персонами. Исследование показало, что эмоциональная привязанность к интернет-личностям играет ключевую роль в формировании доверия поколения Z, что существенно влияет на их импульсивные покупки. Кроме того, эмоциональная связь усиливает действие доверия на спонтанное поведение при покупках.

Несмотря на заметное влияние доверия по отношению к социальным персонам на импульсивное поведение, относительно слабая корреляция между этими аспектами подчёркивает необходимость дальнейшего изучения других факторов, определяющих покупательские решения поколения Z.

Ключевые слова

цифровой инфлюенсер; цифровой подписчик; поколение Z; социальные медиа; эмоциональная привязанность; незапланированное покупательское поведение; импульсивные покупки; инфлюенс-маркетинг; потребители; доверие

Это произведение доступно по лицензии Creative Commons “Attribution” («Атрибуция») 4.0 Всемирная

1 Email: alpera[at]selcuk.edu.tr ORCID https://orcid.org/0000-0002-4347-7306
2 Email: halil.sunar[at]windowslive.com ORCID https://orcid.org/0000-0002-5131-4056
3 Email: bilalerdem[at]selcuk.edu.tr ORCID https://orcid.org/0000-0002-2026-1334

Introduction

As the internet and mobile communication technologies have grown, new social media platforms have emerged where anyone can create and share content. The rise of social media has revolutionized many markets and opened up exciting new possibilities for businesses and consumers. Consumers are increasingly choosing to follow global and national influencers on social media platforms due to their global nature. Marketers have come to realize that not all influencers who have the opportunity to reach massive audiences on social media are celebrities and that they can benefit from non-celebrity influencers at low prices (Charlesworth, 2018, p. 43). Consequently, companies may increasingly utilize them as a marketing technique for their consumers (Torres et al., 2019; Boerman, 2020). Companies can expand their reach and access diverse markets by capitalizing on their established fan network. In addition, collaborating with them can enhance credibility and establish trust among consumers by delivering genuine and relatable content (Leung et al., 2022; Haenlein, 2020; Breves et al., 2019). Digital influencers (DIs) have emerged as new opinion-makers on these platforms (Lou & Yuan, 2019). DIs create and distribute material online to a large audience, revealing their personal lives, ideas, and experiences (Veirman et al., 2017). DIs form new market voices and brands. They can affect consumer views and purchasing decisions by leveraging their internet presence and impact. DIs demonstrated their ability to affect the purchasing intentions of their followers, which caught the attention of brand managers. As a result, brand managers promptly incorporated them into their marketing strategies (Djafarova & Rushworth, 2017; Kudeshia & Kumar, 2017; Santiago & Castelo, 2020). Consequently, companies progressively rely on DIs as a crucial element of their marketing efforts (Silva et al., 2020). They are becoming more prevalent in people's everyday lives due to their television and brand contracts, activities, and social media following size (Hudders et al., 2021).

DIs have rapidly grown due to evolving social media user preferences for collaborative, original, and community-oriented content. This presents opportunities for brands to collaborate with them, increasing engagement and potentially affecting sales (Raini & Mulyana, 2022, p. 100). Modern companies generally rely on DIs to spread favorable online content, typically through endorsements, instead of using celebrities (Torres et al., 2019, p. 1267). DIs exert impact by molding their followers' impressions of a specific brand and fostering an emotional connection between them and the organization. These actions can, in turn, enhance the perceived quality of information and foster emotional attachment among followers (Shah et al., 2023, p. 2).

As a result of their propensity for social media and proficiency with digital technologies, members of Generation Z are seen as the ideal audience for influencer marketing (IM) campaigns (Nadanyiova & Sujanska, 2023, p. 1). Generation Z is increasingly influential in the market, gaining purchasing power and

setting trends (Zatwarnicka-Madura et al., 2022, p. 1). They spend much time on social media, relying on content for inspiration and motivation. They interact strongly with DIs with a large following and specialize in a particular field (Li et al., 2020, pp. 55-56). Generation Z values authenticity and transparency in IM, preferring genuine connections over traditional advertising. DIs can shape trends and affect consumer behavior, surpassing traditional marketing strategies (Kim et al., 2020; Nadanyiova & Sujanska, 2023). Therefore, companies can reach potential customers more effectively by collaborating with DIs when targeting Generation Z. In addition, partnerships with them who share the values and interests important to Gen Z can help brands build more profound and meaningful connections with young consumers.

By recognizing the importance of emotional connections in influencing consumer behavior, marketers can create more targeted and impactful campaigns that resonate with Generation Z consumers. This can ultimately lead to increased brand loyalty and higher conversion rates in the competitive digital landscape. This study explores the impact of emotional attachment on Generation Z consumers' trust in DIs and unplanned purchase behavior. By leveraging emotional connections with influencers, brands can effectively reach Generation Z consumers and drive engagement. This study also contributes to the digital marketing strategy by identifying variables that can persuade influencers and consumers on social media. This research underscores the importance of authenticity and relatability in IM to cultivate trust and loyalty among younger audiences. The findings provide insights for DIs and practitioners to expand their followers and increase credibility in IM. Understanding emotional attachment's impact on trust and purchase behavior can help marketers tailor their strategies and build authentic relationships with followers for successful digital marketing campaigns.

Conceptual Framework

Trust in Digital Influencers

Social media is an online platform widely used and expected to grow in popularity. Every consumer or user can become an influencer on social media if they can affect the people who follow them about an idea (Gross & Wangenheim, 2018, p. 31). DIs are individuals whose presence on social media is particularly prominent and holds significant sway over others. They are people who can exert significant effect over a large number of their followers. Typically, they possess specialized knowledge in a specific domain, such as beauty, health, gastronomy, or travel. A recent survey indicated that followers have identical levels of trust in DIs as they do in their peers (Shamim & Islam, 2022, p. 601).

The number of DIs is increasing, and the conventional influencer model involves targeting a specific market sector, such as specializing in areas like travel, fashion, gaming, entertainment, sports, and more (Sookkaew & Saephoo, 2021, p. 328). The expression DI acknowledged as a legitimate profession, surged

in popularity in 2015, before which only 'bloggers' or 'YouTubers' were known. Nevertheless, the term DI is a contemporary term for a preexisting practice. Teams that give them the support they need from various fields for their dissemination and integration into professional challenges, such as lucrative branding contracts, have supported them for many years (Rodrigues et al., 2024, p. 26). Similar to friends who share similar interests, values, and lifestyles (Vrontis et al., 2021; Kim & Kim, 2021; Leung et al., 2022). They use social media accounts to provide information and advice to their followers on specific topics of mutual interest. They use a common language and strive to establish lasting relationships (Campbell & Farrell, 2020; Haenlein et al., 2020; Belanche et al., 2021).

DIs establish and exploit stronger connections with their followers by sharing personal content, typically centered on lifestyles, interests, and viewpoints (Ladhari et al., 2020, p. 2). They have become significant opinion leaders on the internet through blogs, channels, and social networks. The term “influencer marketing” refers to the process of working together with DI. Companies seek to incentivize them to promote and endorse their products through social media engagements (De Veirman et al., 2017, p. 801). Leung et al. (2022) specifically emphasized three distinct and essential characteristics of digital IM: (1) companies carefully choose and motivate DIs; (2) DIs actively involve their followers for business objectives; and (3) businesses utilize DIs' exclusive assets to endorse their products or services (Leung et al., 2022, p. 227).

Trust can be described as customers' anticipation of a service provider, predicated on that provider's reliability and ability to fulfill commitments (Sirdeshmukh et al., 2002, p. 16). It is a dimension of parasocial interaction, defined as an online social relationship between DIs and their followers on social media platforms (Hwang & Zhang, 2018, p. 156). This interaction includes intense emotional ties and intimacy that create a sense of trust (Dibble et al., 2016, p. 34). Trust is one of the factors that affect purchasing intentions. Trust in DIs is knowledge-based, meaning people build trust by repeatedly reading and watching their content (Hsu et al., 2013, p. 81). They are perceived as more trustworthy than celebrities due to their expertise and proximity to their followers' interests, significantly shaping their followers with their opinions (Djafarova & Rushworth, 2017; Xiao et al., 2018; Stubb et al., 2019; Masuda et al., 2022).

In particular, research topics that have gained importance include the exponential rise in popularity of DIs on social media, the widespread use of IM in business strategies, and the effect of them as a promotional tool on consumer decision-making behavior with the increase in social media interactions (Fernandez & Castillo, 2021, p. 1123). Trust in DIs has been studied in terms of how it affects people's plans to buy (Hsu et al., 2013; Silva et al., 2019; Santiago et al., 2020; Lou & Yuan, 2019; Shamim & Islam, 2022; Santiago & Serralha, 2022; Rodrigues et al., 2024), how they think about things (Nascimento et al., 2020; De Cicco et al., 2024), how they feel (Booth & Matic, 2011; De Veirman et al., 2017; Panggati et al., 2023;

Rodrigues et al., 2024), and how they affect society (Ki et al., 2020; Chetioui et al., 2020; Sookkaew & Saephoo, 2021). Scholars have explored the ethical implications of IM, its impact on consumer trust and loyalty, and the psychological factors contributing to its effectiveness, such as social proof and parasocial relationships, in relation to DI collaborations with brands.

Emotional Attachment

Attachment is an emotional bond between an individual and a specific object, influencing the allocation of resources and resulting in emotions such as proximity-seeking behavior, separation distress, and mourning of loss (Fedorikhin et al., 2008, p. 282). Emotional attachment, a bond connecting an individual with a specific target, is an essential construct within the marketing domain (Jiménez & Voss, 2014, p. 360). Emotional attachment is a strong and distinctive tie between an individual and another human or item, characterized by intense emotions. The literature strongly supports the notion that customers have the potential to form emotional relationships with brands (Berry, 2000; Thomson et al., 2005; Ladhari et al., 2020). Emotional attachment is the bond between a consumer and a specific brand. This bond is formed by favorite encounters, common principles, and confidence. Emotional affinity can foster unwavering commitment and active promotion of a brand (Shahid et al., 2022, p. 1402).

According to Thomson et al. (2005), emotional attachment consists of three interconnected dimensions: affection, passion, and connection. Affection encompasses emotions such as adored, adulated, amicable, serene, and many other sentiments that indicate people's warm regard towards a business. Furthermore, passion encompasses emotions such as enthusiasm, exhilaration, captivation, and any other sentiment that signifies a powerful inclination that steers consumers toward a particular brand. The third dimension is the connection aspect, which encompasses being linked and united with the brand (Thomson et al., 2005, p. 78).

Emotions motivate customers to choose and connect with a product or service. The emotional connection between a company and its customers gradually forms as emotions affect our decisions in an emotional world. For this reason, marketers usually seek to build an emotional link between their brands and consumers (Levy & Hino, 2016, p. 138).

Follower-DI emotional attachment refers to the emotional connection that followers develop towards the DIs they follow. Emotional attachment is a strong relationship between a person and a specific object, such as a DI. The strength of this bond is directly related to the intensity of the individual's feelings of connection and affection towards the object (Sánchez-Fernández & Jiménez-Castillo, 2021, p. 1127). This emotional attachment fosters loyalty and trust in followers, increasing engagement and support for content. DIs can leverage this to build a dedicated and loyal following.

Unplanned Purchase Behavior

The concept of unplanned purchase entered the literature in the 1950s and is still widely researched today. This concept, which was first widely studied in psychology, has gained popularity in marketing and sociology (Torlak & Tiltay, 2010, p. 406). Consumers show impulsive behaviors to satisfy their needs, and their behaviors are formed based on impulses (Rook, 1987, p. 189). Unplanned purchase behavior is defined as the consumer making a quick decision and suddenly buying the product (Clover, 1950; Stern, 1962; Rook & Gardner, 1993; Rook & Fischer, 1995; Hausman, 2000).

Unplanned purchasing behavior is more common today because of the abundance of options available to consumers and increased product and brand diversity (Kaur, 2014, p. 30). Unplanned purchase behavior is an essential factor influencing consumers' buying processes, and marketers often develop strategies to understand and manage such behavior. Marketers often design these strategies based on emotional and impulsive responses, intending to encourage consumers to make unplanned purchases (Rook & Gardner, 1993; Rook & Fischer, 1995; Wu et al., 2016).

The nine factors that significantly impact unplanned purchase behavior are low price, marginal product need, mass distribution, self-service, mass advertising, display in selected stores, short product life, small product size or lightweight, and ease of storage (Stern, 1962, pp. 61-62). Muruganantham and Bhakat (2013) categorized these nine factors into four elements: consumer characteristics, product characteristics, store characteristics, and situational factors. Previous research on unplanned purchase behavior focused on product-oriented studies but was criticized for being too product-oriented and lacking consumer insight. Researchers shifted to understanding behavioral dimensions, investigating the behavioral aspects of unplanned purchase behavior.

Unplanned purchase behavior can occur online as well as in traditional environments. Online unplanned purchase refers to the unplanned purchase of products through online shopping sites (Sumetha & Vasanthi, 2016, p. 28). Recommendations are an important external factor that pushes consumers into unplanned purchase behavior in online shopping (Henriques & Barreto, 2019, p. 252). Consumers frequently base their purchasing decisions on recommendations from friends, family, and online reviews.

Consumers buy without any order or choice, targeting unplanned purchases without a purpose, and in this case, consumers' emotions and feelings have a significant impact (Venkatesh & Renuka, 2019, p. 198). The consumers feel a sense of happiness after making an unplanned purchase. The consumer may feel positive emotions, such as excitement and pleasure, and negative emotions, such as guilt and regret (Rook & Gardner, 1993, pp. 6-7). The positive emotions can stem from the excitement of acquiring something new and the pleasure of indulging in a spontaneous treat. Consumers may also experience a temporary boost in mood or satisfaction from the act of indulging in something unexpected. On the other hand, feel-

ings of guilt and regret may arise due to overspending or deviating from a budget. However, they may later question the necessity of the purchase and feel conflicted about their decision. These emotions can be shaped by factors such as the perceived value of the purchase and personal beliefs about spending habits.

Unplanned purchase behavior is affected by instantaneous factors, activating the purchase motive in vulnerable moments. Consumers focus on emotions like happiness, excitement, and privilege, not considering potential problems after consumption. This wasteful and unpleasant habit can lead to financial problems, restlessness, guilt, and regret when the consumption motive loses its effect (Rook & Fisher, 1995, p. 306).

Methodology

Hypothesis Development and Research Model

The study aims to determine the role of emotional attachment to DIs in the effect of trust in DIs on unplanned purchase behavior. In line with the purpose of the study, a literature review was conducted to formulate a hypothesis and research model. Many studies in the literature (Hsu et al., 2013; Djafarova & Rushworth, 2017; Nugraha & Setyanto, 2018; Sokolova & Kefi, 2020; Weismueller et al., 2020; Masuda et al., 2022; Ao et al., 2023) have found a positive relationship between trust in DIs and purchase intention. Other studies (Hu et al., 2019; Gunawan & Iskandar, 2020; Abdullahi et al., 2020; Hashem, 2021; Koay et al., 2023; Shamim & Islam, 2022; Liu et al., 2023), which similarly support the results of these studies but are very few, have found that trust in DIs has a positive effect on unplanned purchase behavior. Studies confirming the positive relationship between trust in DIs and emotional attachment (Sánchez-Fernández & Jiménez-Castillo, 2021; Chen & Yang, 2023) are much fewer, and there are no studies on the mediating role of emotional attachment in the relationship between trust and unplanned purchase behavior. These findings from the literature led to the formation of the hypothesis and research model.

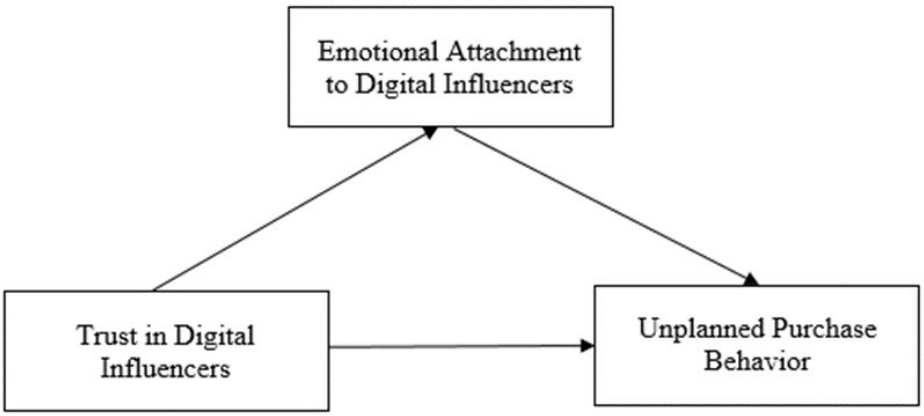

Figure 1. Symbolic Model of the Study

The hypothesis created in line with the symbolic model of the research:

Hypothesis 1. Emotional attachment to DIs has a mediating role in the effect of participants' perception of trust in DIs on unplanned purchase behavior.

Data Collection

The research focuses on Generation Z individuals born in 2000 or later, residing in Istanbul, and aged 18 and above. Generation Z individuals exhibit primary characteristics such as high technology adoption (Dolot, 2018, p. 46), active social media usage (Sharma et al., 2023, p. 9), and quick independent decision-making (Pavlić & Vukić, 2020, p. 86). These traits are closely linked to the concepts of "DI" (Zatwarnicka-Madura et al., 2022; Nadanyiova & Sujanska, 2023), "unplanned purchase" (Djafarova & Bowes, 2021; Chetioui & El Bouzidi, 2023), and "emotional attachment" (Awasthi & Mehta, 2020; Srirahayu et al., 2022) in the study. As of the end of 2023, Turkey's population stands at 85.4 million, with Istanbul's population at 15.6 million. Population density, defined as "the number of people per square kilometer," is 111 in Turkey and 3013 in Istanbul (TURKSTAT, 2023). Besides being Turkey's most populous city, Istanbul excels in social, cultural, and economic aspects (Aksoy & Robins, 2021; Turgut, 2021). Istanbul was chosen for the study because it represents a diverse and typical sample.

The survey technique was applied as a data collection method in the research. First and foremost, two questions are in the questionnaire form to determine the participants' social media platform usage status and whether they follow DIs. If they answer yes to these questions, they can continue filling out the questionnaire form. The questionnaire form includes five questions to determine the demographic characteristics of the participants (gender, age, income level, education level, and marital status). In the second part of the questionnaire, there are 19 propositions in total, including trust in DIs (9 propositions), emotional attachment to DIs (5 propositions), and unplanned purchase behavior (5 propositions). The questionnaire form weighted the response options for the 19 propositions from 1 to 5 respectively. These weights were graded as "(1) Strongly Disagree, (2) Disagree, (3) Neither Disagree nor Agree, (4) Agree, and (5) Strongly Agree," While creating the questionnaire form, the scales used in the studies of Sánchez-Fernández and Jiménez-Castillo (2021) for the scale of emotional attachment to DIs, Shamim and Islam (2022), Pop, Săplăcan, Dabija, and Alt (2022) for the scale of trust in DIs, Shamim & Islam (2022), Leong, Jaafar, and Sulaiman (2017) for the scale of unplanned purchase behavior. The questionnaire form created using these scales was shared online with participants between January 29 and February 15, 2024, and data were obtained. The data obtained by removing the incorrect and incomplete questionnaires from the completed questionnaire forms were analyzed through analysis package programs.

Results

Analyses and tests were conducted with the data obtained from the 766 questionnaire forms remaining after the questionnaire forms that were not marked, left blank, or answered incorrectly and not included in the analyses were removed from the questionnaire study conducted on individuals living in Istanbul and meeting the age criteria of Generation Z.

Table 1. Frequency Distribution of Participants' Demographic Characteristics

Gender	f	%	Education Level	f	%
Female	410	53,5	Primary/High School	174	22,7
Male	356	46,5	Associate Degree	366	47,8
Marital Status	f	%	Bachelor's Degree	218	28,5
Married	76	9,9	Post Graduate	8	1,0
Single	690	90,1	Age	f	%
Monthly Income	f	%	18 Years	75	9,8
10000 TL and less	208	27,2	19 Years	98	12,8
10001- 15000 TL	365	47,7	20 Years	147	19,2
15001-20000 TL	113	14,8	21 Years	193	25,2
20001-25000 TL	46	6,0	22 Years	89	11,6
25001 TL and more	34	4,4	23 Years	34	4,4
			24 Years	130	17,0

53.5% of the participants are female, 46.5% are male; 9.9% are married, 90.1% are single; 22.7% are primary/high school, 47.8% are associate degree, 28.5% are undergraduate, 1% are graduate; 27.2% have an income level of 10000 TL and below, 47.7% have an income level of 10001- 15000 TL, 14.8% have an income level of 15001-20000 TL, 6% have an income level of 20001-25000 TL, 4.4% have an income level of 25001 TL and above, 9%, 8% were 18 years old, 12.8% were 19 years old, 19.2% were 20 years old, 25.2% were 21 years old, 11.6% were 22 years old, 4.4% were 23 years old and 17% were 24 years old.

The KMO values of the scales of trust in digital DIs, emotional commitment to digital DIs, and unplanned purchase behavior used in the questionnaire form, suitable for factor analysis, are above 0.50, and Bartlett's test value is less than 0.05. These results indicate that the data is appropriate for factor analysis, suggesting a strong correlation between the variables.

Table 2. Factor Analysis Results of the Trust in Digital influencers (TIDI) Scale

Trust in DIs	Communality	Factor Load	Eigenvalue	Variance	Mean	Alpha
TIDI 3	,812	,901			3,283	,950
TIDI 4	,795	,892			3,174	,950
TIDI 1	,785	,886			3,177	,951
TIDI 2	,785	,886			3,330	,950
TIDI 5	,771	,878			3,407	,951
TIDI 6	,744	,863			3,214	,952
TIDI 8	,739	,860			3,347	,952
TIDI 9	,718	,848			3,319	,953
TIDI 7	,568	,754			3,287	,958
AVE: 0,746 CR: 0,963			10,675	74,631	3,28	,957

NOTE: Principal component analysis with Varimax rotation. Kaiser-Meyer-Olkin sampling adequacy: 93.8%; Chi-Square for Bartlett's test of sphericity: 6828,025, s.d.: 36, p=0.000; n: 766; Overall mean: 3.28; s.d.: 1.087; Alpha for the whole scale: 0.957; Total variance explained: 74.631% Response categories: 1: Strongly Disagree..... 5: Strongly Agree

As a result of the explanatory factor analysis conducted with nine items in the scale of trust in DIs, the lowest concurrence was 0.568, and the lowest factor loading was 0.754. The single dimension scale explains 74.631% of the total variance. These results indicate that the items in the scale are strongly correlated, suggesting a high level of internal consistency.

Table 3. Factor Analysis Results of the Emotional Attachment to Digital influencers (EADI) Scale

Emotional Attachment to DIs	Communality	Factor Load	Eigenvalue	Variance	Mean	Alpha
EADI 3	,736	,858			3,853	,827
EADI 1	,665	,816			3,793	,841
EADI 4	,653	,808			3,766	,852
EADI 2	,649	,805			3,857	,844
EADI 5	,592	,770			4,181	,848
AVE: 0,659 CR: 0,906			3,755	66,222	3,89	,870

NOTE: Principal component analysis with Varimax rotation. Kaiser-Meyer-Olkin sampling adequacy: 86.7%; Chi-Square for Bartlett's test of sphericity: 1750,936, s.d.: 10, p=0.000; n: 766; Overall mean: 3.89; s.d.: 0.863; Alpha for the whole scale: 0.870; Total variance explained: 66.222% Response categories: 1: Strongly Disagree..... 5: Strongly Agree

As a result of the explanatory factor analysis conducted with the five items in the scale of emotional commitment to digital DIs, the lowest concurrence was 0.592, and the lowest factor loading was 0.770. The single-dimension scale explains 66.222% of the total variance. These results indicate that the items on the scale are closely related to each other and measure a single underlying construct.

Table 4. Factor Analysis Results of the Scale of Unplanned Purchase Behavior (UPB)

Unplanned Purchase Behavior	Communality	Factor Load	Eigenvalue	Variance	Mean	Alpha
UPB 1	,725	,851			3,758	,831
UPB 2	,710	,843			3,527	,837
UPB 4	,673	,820			3,582	,840
UPB 3	,665	,815			3,718	,841
UPB 5	,515	,718			3,852	,862
AVE: 0,657 CR: 0,905			5,494	66,392	3,687	871

NOTE: Principal component analysis with Varimax rotation. Kaiser-Meyer-Olkin sampling adequacy: 86.2%; Chi-Square for Bartlett's test of sphericity: 1764,938, s.d.: 10, p=0.000; n: 766; Overall mean: 3.68; s.d.: 1.043; Alpha for the whole scale: 0.87; Total variance explained: 66.392% Response categories: 1: Strongly Disagree..... 5: Strongly Agree

As a result of the explanatory factor analysis conducted with the five items in the scale of unplanned purchase behavior, the lowest concurrence was 0.515, and the lowest factor loading was 0.718. The single-dimension scale explains 66.392% of the total variance. The high percentage of explained variance suggests that the scale is reliable for assessing this construct.

In studies conducted in the social sciences, factor loadings greater than 0.40 are considered sufficient. When the propositions' factor loadings are examined, they are observed to be greater than 0.40 (Yeşilyurt, 2018, p. 149). All scales' factor loadings, average variance explained (AVE), and composite reliability (CR) values were looked at to judge the measurement model. CR values should be greater than AVE values, and AVE values should be greater than 0.50 (Hair et al., 2017). In this context, the calculated AVE and CR values of the scales used in the research support convergent validity.

Cronbach's alpha values in the literature generally have a value of 0.70 and above (Kılıç, 2016, p. 47). When the reliability values of the scales used were examined, it was determined that there was no drawback to conducting the analyses.

As seen in Table 5, there is a significant, low level (Alpar, 2018, p. 409) and positive (r=0,233 p<0,01) relationship between emotional attachment to DIs and trust in DIs; a significant, medium level (Alpar, 2018, p. 409) and positively (r=0,468 p<0,01); and a significant, high level (Alpar, 2018, p. 409) and positive (r=0,714 p<0,01) relationship between unplanned purchase behavior and emotional

commitment to DIs. In order to determine whether the scales used within the scope of the research show a normal distribution, skewness values indicating the degree of symmetry of the distribution and kurtosis values indicating the degree of kurtosis of the distribution were examined (Büyüköztürk, 2012, p. 187). Since the skewness and kurtosis values of the data set have a value between -1.5 and +1.5 (Tabachnick & Fidell, 2013) and between +2.00 and -2.00 (George & Mallery, 2010), the data show a normal distribution (Erbay & Beydoğan, 2017, p. 250).

Table 5. Correlation, Mean and Reliability Values of Variables

	TIDI	EADI	UPB
TIDI	1		
EADI	0,233**	1	
UPB	0,468**	0,714**	1
Mean	3,28	3,89	3,68
Standard Deviation	1,08	0,863	1,04
Cronbach's Alpha	0,957	0,870	0,871

*:p<0,05; **:p<0,01; TIDI: Trust in Digital influencers, EADI: Emotional Attachment to Digital influencers, UPB: Unplanned Purchase Behavior

In order to test Hypothesis 1, which was formed in line with the purpose of the study, a structural equation model was created.

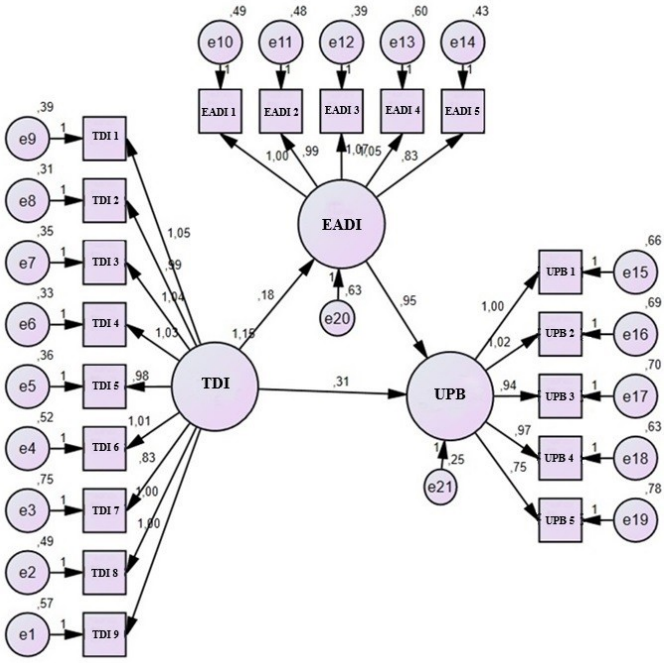

Figure 2. Path Analysis for Hypothesis 1
The goodness of fit values obtained as a result of the model test (X2/df=4.974; RMSEA=0.072; GFI=0.908; AGFI=0.882; NFI=0.935; CFI=0.947; NNFI=939; RFI=0.925) show that the model is acceptable (Schermelleh et al., 2003, p. 30; Meydan & Şeşen, 2015: 37).

Table 6. Main Effects on Dependent Variables

Factor	Path	Factor	Standardized estimation	Unstandardized estimation	S.E.	C.R.	p
EADI	<---	TIDI	0,241	0,184	0,03	6,096	***
UPB	<---	TIDI	0,318	0,309	0,028	11,219	***
UPB	<---	EADI	0,743	0,945	0,052	18,342	***

As seen in Table 6, the model was statistically significant (p<0.05). According to Table 6, R^2 (percentage of variance explained) and p (degree of significance) values show that the perception of trust in DIs affects emotional commitment to DIs (p=*** (p<0.001); R^2 =0.241). With the current model, the perception of trust in DIs explains 24.1% of the variation in emotional commitment to DIs. The unexplained part of the change is due to other variables that affect the emotional commitment to DIs other than the variable considered in the model.

Table 6 shows that the model is statistically significant (p<0.05). According to Table 6, R^2 (percentage of variance explained) and p (significance level) values show that the perception of trust in DIs affects unplanned purchase behavior (p=*** (p<0.001); R^2 =0.318). With the current model, the perception of trust in DIs explains 31.8% of the variation in unplanned purchase behavior. The unexplained part of the change is due to variables other than those considered in the model that affect unplanned purchase behavior.

Table 6 shows that the model is statistically significant (p<0.05). According to Table 6, R^2 (percentage of variance explained) and p (significance level) values show that emotional commitment to digital DIs affects unplanned purchase behavior (p=*** (p<0.001); R^2 =0.743). With the current model, emotional attachment to DIs explains 74.3% of the variation in unplanned purchase behavior. The unexplained part of the change is due to variables other than those considered in the model that affect unplanned purchase behavior.

Table 7. Total, Direct and Indirect Effects of Trust in DIs on Unplanned Purchase Behavior

The Total Effect of Trust in DIs on Unplanned Purchase Behavior				
	B	LLCI	ULCI	p
	0,484	0,436	0,562	0,004
The Direct Effect of Trust in DIs on Unplanned Purchase Behavior				
	B	LLCI	ULCI	p
	0,309	0,257	0,368	0,011
The Effect of Emotional Attachment to DIs and Trust in DIs on Unplanned Purchase Behavior (Indirect)				
DEG --> DEDB --> PSAD	B	LLCI	ULCI	p
	0,174	0,139	0,226	0,003

The study's results showed that adding the variable of emotional attachment to the DI (indirect effect) to the model that looked at the link between trusting the DI and buying things that were not planned is still statistically significant but has a negligible effect. Therefore, it was determined that emotional attachment to the DI mediates the effect of trust in the DI on unplanned purchase behavior. In addition, since the indirect effect confidence interval (0.139–0.226) does not contain a zero value, it was determined that emotional attachment to DIs partially mediates (Hayes, 2017).

Conclusion

Digital DIs have greatly affected the purchasing behavior of Generation Z, as evidenced by studies (Zatwarnicka-Madura et al., 2022; Nadanyiova & Sujanska, 2023; Sharma et al., 2023). Generation Z, strongly inclined towards social impact and technology, has embraced them with significant social media followings (Dolot, 2018; Pavlić & Vukić, 2020). The intense emotional attachments that Generation Z forms with them, whom they see as relatable and trustworthy, significantly impact their unplanned purchase behavior (Gajanová et al., 2020, p. 290). This emotional connection often prompts Generation Z to make impulsive and unplanned purchases as they seek to mimic the DIs' lifestyles and consumption habits. This emotional connection can override the rational decision-making processes of Generation Z (Nadanyiova & Sujanska, 2023, pp. 74-75). This emotional connection can induce a sense of urgency and a fear of missing out among Generation Z, compelling them to swiftly make purchasing decisions based on their favorite DIs' recommendations (Sharma et al., 2023, p. 3). Previous studies in the literature predominantly examine the impact of trust in DIs on purchase intention, highlighting a gap in understanding the impact on unplanned purchase behavior. This study focuses on how emotional attachment affects the impact of trust in DIs on impulse buying, a topic that has yet to be explored in a comprehensive model. This aspect sets the study apart and will add valuable insights to the current body of research.

Our study has shown that emotional attachment to DIs mediates the effect of Generation Z's perceptions of trust in DIs on unplanned purchase behavior. The empirical results reveal the conceptual framework's objectivity, reliability, and confirmation of Hypothesis 1. The moderating analysis of whether emotional attachment moderates the investigated independent variables and the dependent variable has led to an acceptance of H1. The findings suggest that emotional attachment significantly shapes consumer behavior and trust towards DIs. Generation Z's emotional attachment to DIs reduces the effect of their trust in DIs on unplanned purchase behavior. In this case, it was concluded that Generation Z's emotional attachment to DIs is more effective in influencing unplanned purchase behavior. This instantaneous development, which accounts for the high level of emotional attachment and its impact on unplanned purchasing behavior, indicates the signifi-

cance of the commitment to them. Studies that support our findings have also found that trust in the DI has a positive effect on unplanned purchase behavior (Eriksson & Järkemyr, 2018; Abdullahi et al., 2020; Gunawan & Iskandar, 2020; Hashem, 2021; Zafar et al., 2021; Herzog, 2023), and emotional attachment has a positive effect on unplanned purchase behavior (Akbar et al., 2020; Alemu & Zewdie, 2021; Pereira, 2021; Herzog, 2023; Liu et al., 2023). As proven by the results of different studies in the literature, DIs impact unplanned purchase behavior in different ways. In the results of our study, when trust in DIs and emotional attachment to DIs are evaluated together, they continue to affect unplanned purchases. In this case, it is confirmed that emotional attachment to DIs mediates the effect of trust in DIs on unplanned purchase behavior. Including emotional attachment to DIs in the model reduces the impact of trust in DIs on unplanned purchase behavior. This demonstrates that Generation Z individuals prioritize emotional attachment over trust. Another important result of the study is that although trust in DIs affects unplanned purchase behavior, the relationship between them is low. It is believed that individuals rely on trusted them when making planned purchases. This suggests that while they play a role in influencing consumer behavior, their impact may be more significant for spontaneous purchases than planned ones. This suggests that consumers may prioritize different factors when making spontaneous purchases than when they have more time to research and consider their options. Understanding these distinctions can help marketers tailor their strategies to effectively reach consumers in both scenarios.

The study's findings suggest that emotional attachment significantly shapes Generation Z consumer behavior and trust towards DIs. Understanding these variables can help marketers tailor their strategies to better engage with Generation Z consumers on social media platforms. These findings can provide valuable and unique insights for marketers targeting Generation Z consumers through DI collaborations. These findings emphasize the importance of brands and marketers understanding Generation Z's emotional attachment to DIs to effectively affect their unplanned purchasing decisions. By recognizing and leveraging this emotional attachment, companies can better engage with this demographic and drive more unplanned purchases.

Limitations

The study identified several limitations that should be considered. These limitations should be considered when evaluating this study's results or conducting new studies. The first limitation is that the target group of the study is Turkish Generation Z, between the ages of 18 and 24, living in Istanbul. As noted, the study sample consists of individuals aged 18 to 24, making the assumptions applicable only to this specific age group. Another aspect to consider is the effect of nationality, given that the study took place in Istanbul. The authors did their best to translate the study findings from Turkish to English, but differences in word meanings between the two languages may exist. Another challenge was the complexity of

analyzing consumers' unplanned purchase behavior and its psychological manifestation. This behavior sometimes occurs in consumers' subconscious and can be difficult for people to accept and recognize. Another limitation arose due to the need for more specifications regarding products or sectors, leading to variations based on product types and individual characteristics. Thus, research in diverse sectors could yield results distinct from those of previous studies. Lastly, the study focused solely on consumers' viewpoints, thereby omitting the viewpoints of DIs or companies.

Future Research

Due to the narrow age range of this study's sample, the generalizability of the findings could be more robust, and therefore, it is recommended that future studies should be conducted with a sample that addresses all age groups. This study was conducted on Turkish citizens and from a Turkish perspective so that future studies can address the same research problem in different cultures and countries. Since DIs are a global phenomenon and can connect people from everywhere through social media platforms, conducting a study across different cultures would be interesting. It would also be interesting to investigate the impact of different factors on the effect of trust in DIs on unplanned purchase behavior rather than the mediation of emotional attachment. In addition, the current or potential effects of artificial intelligence applications, which have recently become a popular topic and are becoming more and more present in daily life, can also be investigated. Future studies could also be based on a specific sector or brand perspective.

References | Список литературы

Abdullahi, H. W., Adedeji, I., & Otori, Y. A. (2020). Social Media Influencer and Customer Impulse Buying Behaviour: A Study of MTN Nigeria. *Lapai International Journal of Administration*, 3(3), 147–159.

Address Based Population Registration System Results, 2023. (2023). Turkish Statistical Institute (TUR-STAT). https://data.tuik.gov.tr/Kategori/GetKategori?p=Nufus-ve-Demografi-109

Akbar, M. I. U. D., Ahmad, B., Asif, M. H., & Siddiqui, S. A. (2020). Linking Emotional Brand Attachment and Sales Promotion to Post-Purchase Cognitive Dissonance: The Mediating Role of Impulse Buying Behavior. *The Journal of Asian Finance, Economics and Business*, 7(11), 367–379. https://doi.org/10.13106/JAFEB.2020.VOL7.NO11.367

Aksoy, A., & Robins, K. (2021). Cultural Politics and Conquest Culture. *Cultural Politics*, 17(3), 279–301. https://doi.org/10.1215/17432197-9305363

Alemu, M., & Zewdie, S. (2022). Consumers' Impulse Buying Behavior: Structured Systematic Literature Review. *International Journal of Management, Accounting and Economics*, 8(10), 756–781. https://doi.org/10.5281/zenodo.5975984

Alpar, R. (2018). *Spor, Sağlık ve Eğitim Bilimlerinden Örneklerle Uygulamalı İstatistik ve Geçerlik-Güvenirlik [Applied Statistics and Validity-Reliability with Examples from Sports, Health and Education Sciences]* (5th ed.). Detay Yayıncılık. (In Turkish).

Ao, L., Bansal, R., Pruthi, N., & Khaskheli, M. B. (2023). Impact of Social Media Influencers on Customer Engagement and Purchase Intention: A Meta-Analysis. *Sustainability*, 15(3), 2744. https://doi.org/10.3390/su15032744

Belanche, D., Casaló, L. V., Flavián, M., & Ibáñez-Sánchez, S. (2021). Understanding influencer marketing: The role of congruence between influencers, products and consumers. *Journal of Business Research*, 132, 186–195. https://doi.org/10.1016/j.jbusres.2021.03.067

Berry, L. L. (2000). Cultivating Service Brand Equity. *Journal of the Academy of Marketing Science*, 28(1), 128–137. https://doi.org/10.1177/0092070300281012

Boerman, S. C. (2020). The effects of the standardized instagram** disclosure for micro- and meso-influencers. *Computers in Human Behavior*, 103, 199–207. https://doi.org/10.1016/j.chb.2019.09.015

Booth, N., & Matic, J. A. (2011). Mapping and leveraging influencers in social media to shape corporate brand perceptions. *Corporate Communications: An International Journal*, 16(3), 184–191. https://doi.org/10.1108/13563281111156853

Breves, P. L., Liebers, N., Abt, M., & Kunze, A. (2019). The Perceived Fit between Instagram** Influencers and the Endorsed Brand: How Influencer–Brand Fit Affects Source Credibility and Persuasive Effectiveness. *Journal of Advertising Research*, 59(4), 440–454. https://doi.org/10.2501/JAR-2019-030

Büyüköztürk, Ş. (2012). *Sosyal Bilimler İçin Veri Analizi El Kitabı, İstatistik, Araştırma Deseni SPSS Uygulamaları ve Yorum [Handbook of Data Analysis for Social Sciences, Statistics, Research Design, SPSS Applications and Interpretation]*. Pegem Akademi Yayınları. (In Turkish).

Campbell, C., & Farrell, J. R. (2020). More than meets the eye: The functional components underlying influencer marketing. *Business Horizons*, 63(4), 469–479. https://doi.org/10.1016/j.bushor.2020.03.003

Charlesworth, A. (2018). *Digital Marketing: A Practical Approach.* Routledge.

Chen, N., & Yang, Y. (2023). The Role of Influencers in Live Streaming E-Commerce: Influencer Trust, Attachment, and Consumer Purchase Intention. *Journal of Theoretical and Applied Electronic Commerce Research*, 18(3), 1601–1618. https://doi.org/10.3390/jtaer18030081

Chetioui, Y., Benlafqih, H., & Lebdaoui, H. (2020). How fashion influencers contribute to consumers' purchase intention. *Journal of Fashion Marketing and Management: An International Journal*, 24(3), 361–380. https://doi.org/10.1108/JFMM-08-2019-0157

Chetioui, Y., & El Bouzidi, L. (2023). An investigation of the nexus between online impulsive buying and cognitive dissonance among Gen Z shoppers: Are female shoppers different? *Young Consumers*, 24(4), 406–426. https://doi.org/10.1108/YC-06-2022-1548

Clover, V. T. (1950). Relative Importance of Impulse-Buying in Retail Stores. *Journal of Marketing*, 15(1), 66–70. https://doi.org/10.1177/002224295001500110

De Cicco, R., Iacobucci, S., Cannito, L., Onesti, G., Ceccato, I., & Palumbo, R. (2024). Virtual vs. Human influencer: Effects on users' perceptions and brand outcomes. *Technology in Society*, 77, 102488. https://doi.org/10.1016/j.techsoc.2024.102488

De Veirman, M., Cauberghe, V., & Hudders, L. (2017a). Marketing through Instagram** influencers: The impact of number of followers and product divergence on brand attitude. *International Journal of Advertising*, 36(5), 798–828. https://doi.org/10.1080/02650487.2017.1348035

De Veirman, M., Cauberghe, V., & Hudders, L. (2017b). Marketing through Instagram** influencers: The impact of number of followers and product divergence on brand attitude. *International Journal of Advertising*, 36(5), 798–828. https://doi.org/10.1080/02650487.2017.1348035

Dibble, J. L., Hartmann, T., & Rosaen, S. F. (2016). Parasocial Interaction and Parasocial Relationship: Conceptual Clarification and a Critical Assessment of Measures: Parasocial Interaction and Parasocial Relationship. *Human Communication Research*, 42(1), 21–44. https://doi.org/10.1111/hcre.12063

Djafarova, E., & Bowes, T. (2021). 'Instagram** made Me buy it': Generation Z impulse purchases in fashion industry. *Journal of Retailing and Consumer Services*, 59, 102345. https://doi.org/10.1016/j.jretconser.2020.102345

Djafarova, E., & Rushworth, C. (2017). Exploring the credibility of online celebrities' Instagram** profiles in influencing the purchase decisions of young female users. *Computers in Human Behavior*, 68, 1–7. https://doi.org/10.1016/j.chb.2016.11.009

Dolot, A. (2018). The characteristics of Generation Z. *E-Mentor*, 74(2), 44–50. https://doi.org/10.15219/em74.1351

Erbay, Ş., & Beydoğan, H. Ö. (2017). Eğitimcilerin Eğitim Araştırmalarına Yönelik Tutumları [Educators' Attitudes Towards Educational Research]. *Ahi Evran Üniversitesi Kırşehir Eğitim Fakültesi Dergisi [Ahi Evran University Journal of Kırşehir Faculty of Education]*, 18(3), 246-260. (In Turkish).

Eriksson, E. B., & Järkemyr, R. (2018). *Do You Give in to Your Inner Shopaholic?* [Master Thesis, Jönköping University]. https://www.diva-portal.org/smash/get/diva2:1210286/FULLTEXT01.pdf

Fedorikhin, A., Park, C. W., & Thomson, M. (2008). Beyond fit and attitude: The effect of emotional attachment on consumer responses to brand extensions. *Journal of Consumer Psychology*, 18(4), 281–291. https://doi.org/10.1016/j.jcps.2008.09.006

George, D., & Mallery, M. (2010). *SPSS for Windows Step by Step. A Simple Guide and Reference, 17.0 update* (10th ed.). Pearson.

Gross, J., & Wangenheim, F. V. (2018). *The Big Four of Influencer Marketing. A Typology of Influencers.* (SSRN Scholarly Paper No. 3230687). Social Science Research Network. https://papers.ssrn.com/abstract=3230687

Gunawan, N. P., & Iskandar, Ir. B. P. (2020). Analyzing the Impact of Fashion Influencer on Online Impulsive Buying Behavior. *KnE Social Sciences*, 1, 350–363. https://doi.org/10.18502/kss.v4i6.6611

Haenlein, M., Anadol, E., Farnsworth, T., Hugo, H., Hunichen, J., & Welte, D. (2020). Navigating the New Era of Influencer Marketing: How to be Successful on Instagram**, TikTok, & Co. *California Management Review*, 63(1), 5–25. https://doi.org/10.1177/0008125620958166

Hashem, D. T. N. (2021). Impact of Influencer Marketing – Three Rs—On Impulsive Purchase Behavior The Moderating Influence of Gender. *Journal of Positive Psychology and Wellbeing*, 5(4), 1481-1499.

Hausman, A. (2000). A multi-method investigation of consumer motivations in impulse buying behavior. *Journal of Consumer Marketing*, 17(5), 403–426. https://doi.org/10.1108/07363760010341045

Henriques, I., & Barreto, A. M. (2019). The Impact of the purchase channel on unplanned purchases. *Media & Jornalismo*, 19(34), 249–268. https://doi.org/10.14195/2183-5462_34_18

Herzog, J. (2023). *An investigation of the relationship between social media activity and impulsive buying behavior of Generation Z consumers in Austria* [Master's Thesis]. Johannes Kepler Universität Linz.

Hsu, C., Chuan-Chuan Lin, J., & Chiang, H. (2013). The effects of blogger recommendations on customers' online shopping intentions. *Internet Research*, 23(1), 69–88. https://doi.org/10.1108/10662241311295782

Hu, X., Chen, X., & Davison, R. M. (2019). Social Support, Source Credibility, Social Influence, and Impulsive Purchase Behavior in Social Commerce. *International Journal of Electronic Commerce*, 23(3), 297–327. https://doi.org/10.1080/10864415.2019.1619905

Hudders, L., De Jans, S., & De Veirman, M. (2021). The commercialization of social media stars: A literature review and conceptual framework on the strategic use of social media influencers. *International Journal of Advertising*, 40(3), 327–375. https://doi.org/10.1080/02650487.2020.1836925

Hwang, K., & Zhang, Q. (2018). Influence of parasocial relationship between digital celebrities and their followers on followers' purchase and electronic word-of-mouth intentions, and persuasion knowledge. *Computers in Human Behavior*, 87, 155–173. https://doi.org/10.1016/j.chb.2018.05.029

Jiménez, F. R., & Voss, K. E. (2014). An Alternative Approach to the Measurement of Emotional Attachment. *Psychology & Marketing*, 31(5), 360–370. https://doi.org/10.1002/mar.20700

Kaur, P. (2014). Unintended Buying and Post-Purchase Buyer's Remorse: A Study of Consumer Perceptions. *PRIMA: Practices and Research in Marketing*, 5(1/2), 30–36.

Ki, C.-W. (Chloe), Cuevas, L. M., Chong, S. M., & Lim, H. (2020). Influencer marketing: Social media influencers as human brands attaching to followers and yielding positive marketing results by fulfilling needs. *Journal of Retailing and Consumer Services*, 55, 102133. https://doi.org/10.1016/j.jretconser.2020.102133

Kilic, S. (2016). Cronbach's alpha reliability coefficient. *Journal of Mood Disorders*, 6(1), 47. https://doi.org/10.5455/jmood.20160307122823

Kim, A., McInerney, P., Rüdiger Smith, T., & Yamakawa, N. (2020). *What makes Gen Z in Asia different? | McKinsey*. McKinsey&Company. https://www.mckinsey.com/capabilities/growth-marketing-and-sales/our-insights/what-makes-asia-pacifics-generation-z-different

Kim, D. Y., & Kim, H.-Y. (2021). Trust me, trust me not: A nuanced view of influencer marketing on social media. *Journal of Business Research*, 134, 223–232. https://doi.org/10.1016/j.jbusres.2021.05.024

Koay, K. Y., Teoh, C. W., & Soh, P. C.-H. (2021). Instagram** influencer marketing: Perceived social media marketing activities and online impulse buying. *First Monday*. https://doi.org/10.5210/fm.v26i9.11598

Kudeshia, C., & Kumar, A. (2017). Social eWOM: Does it affect the brand attitude and purchase intention of brands? *Management Research Review*, 40(3), 310–330. https://doi.org/10.1108/MRR-07-2015-0161

Ladhari, R., Massa, E., & Skandrani, H. (2020). YouTube vloggers' popularity and influence: The roles of homophily, emotional attachment, and expertise. *Journal of Retailing and Consumer Services*, 54, 102027. https://doi.org/10.1016/j.jretconser.2019.102027

Leong, L.-Y., Jaafar, N. I., & Sulaiman, A. (2017). Understanding impulse purchase in Facebook** commerce: Does Big Five matter? *Internet Research*, 27(4), 786–818. https://doi.org/10.1108/IntR-04-2016-0107

Leung, F. F., Gu, F. F., & Palmatier, R. W. (2022). Online influencer marketing. *Journal of the Academy of Marketing Science*, 50(2), 226–251. https://doi.org/10.1007/s11747-021-00829-4

Levy, S., & Hino, H. (2016). Emotional brand attachment: A factor in customer-bank relationships. *International Journal of Bank Marketing*, 34(2), 136–150. https://doi.org/10.1108/IJBM-06-2015-0092

Li, F., Larimo, J., & Leonidou, L. C. (2021). Social media marketing strategy: Definition, conceptualization, taxonomy, validation, and future agenda. *Journal of the Academy of Marketing Science*, 49(1), 51–70. https://doi.org/10.1007/s11747-020-00733-3

Liu, H., De Costa, M. F. S. D. C. B. M. F., Yasin, M. A. B., & Ruan, Q. (2023). A study on how social media influences on impulsive buying. *Expert Systems*, e13448. https://doi.org/10.1111/exsy.13448

Lou, C., & Yuan, S. (2019). Influencer Marketing: How Message Value and Credibility Affect Consumer Trust of Branded Content on Social Media. *Journal of Interactive Advertising*, 19(1), 58–73. https://doi.org/10.1080/15252019.2018.1533501

Masuda, H., Han, S. H., & Lee, J. (2022). Impacts of influencer attributes on purchase intentions in social media influencer marketing: Mediating roles of characterizations. *Technological Forecasting and Social Change*, 174, 121246. https://doi.org/10.1016/j.techfore.2021.121246

Meydan, C. H., & Şeşen, H. (2015). *Yapısal Eşitlik Modellemesi* AMOS *Uygulamalar [Structural Equation Modeling* AMOS *Applications]* (2nd ed.). Detay Yayıncılık. (In Turkish).

Muruganantham, G., & Bhakat, R. S. (2013). A Review of Impulse Buying Behavior. *International Journal of Marketing Studies*, 5(3), p149. https://doi.org/10.5539/ijms.v5n3p149

Nadanyiova, M., & Sujanska, L. (2023). The Impact of Influencer Marketing on the Decision-Making Process of Generation Z. *Economics and Culture*, 20(1), 68–76. https://doi.org/10.2478/jec-2023-0006

Nascimento, T. C. D., Campos, R. D., & Suarez, M. (2020). Experimenting, partnering and bonding: A framework for the digital influencer-brand endorsement relationship. *Journal of Marketing Management*, 36(11–12), 1009–1030. https://doi.org/10.1080/0267257X.2020.1791933

Nugraha, A., & Setyanto, R. P. (2018). The Effects of Vlogger Credibility as Marketing Media on Brand Awareness to Customer Purchase Intention. *JOURNAL OF RESEARCH IN MANAGEMENT*, 1(2). https://doi.org/10.32424/jorim.v1i2.20

Panggati, I. E., Sasmoko, Simatupang, B., & Abdinagoro, S. B. (2023). Does digital influencer endorsement contribute to building consumers' attitude toward digital advertising during COVID-19 pandemic? Mediating role of brand attitude. *Cogent Business & Management*, 10(2), 2220204. https://doi.org/10.1080/23311975.2023.2220204

Pavlić, I., & Vukić, M. (2019). Decision-making styles of Generation Z consumers in Croatia. *Ekonomska Misao i Praksa*, 28(1), 79–95.

Pop, R.-A., Săplăcan, Z., Dabija, D.-C., & Alt, M.-A. (2022). The impact of social media influencers on travel decisions: The role of trust in consumer decision journey. *Current Issues in Tourism*, 25(5), 823–843. https://doi.org/10.1080/13683500.2021.1895729

Raini, R. F., & Mulyana, F. A. (2022). Analysis of Digital Influencer Characteristics in Building Digital Engagement Through @byu.id Instagram** Account. *Journal of Social and Political Sciences*, 5(3), 100–107. https://doi.org/10.31014/aior.1991.05.03.367

Rodrigues, M. A., Carvalho, M. A., Oliveira, L., & Barbosa, A. (2024). How digital influencer content and characteristics influence Generation Y persuasiveness and purchase intention. *Tourism & Management Studies*, 20(2), 25–38. https://doi.org/10.18089/tms.20240203

Rook, D. W. (1987). The Buying Impulse. *Journal of Consumer Research*, 14(2), 189. https://doi.org/10.1086/209105

Rook, D. W., & Fisher, R. J. (1995). Normative Influences on Impulsive Buying Behavior. *Journal of Consumer Research*, 22(3), 305. https://doi.org/10.1086/209452

Rook, D. W., & Gardner, M. P. (1993). In the mood: Impulse buying's affective antecedents. *Research in Consumer Behavior*, 6(7), 1–28.

Sánchez-Fernández, R., & Jiménez-Castillo, D. (2021). How social media influencers affect behavioural intentions towards recommended brands: The role of emotional attachment and information value. *Journal of Marketing Management*, 37(11–12), 1123–1147. https://doi.org/10.1080/0267257X.2020.1866648

Santiago, J. K., Magueta, D., & Dias, C. (2020). Consumer Attitudes towards Fashion Influencers on Instagram**: Impact of Perceptions and Online Trust on Purchase Intention. *Issues In Information Systems*, 21(1), 105–117. https://doi.org/10.48009/1_iis_2020_105-117

Santiago, J. K., & Moreira Castelo, I. (2020). Digital influencers: An exploratory study of influencer marketing campaign process on instagram**. *Online Journal of Applied Knowledge Management*, 8(2), 31–52. https://doi.org/10.36965/OJAKM.2020.8(2)31-52

Santiago, J. K., & Serralha, T. (2022). What More Influences the Followers? The Effect of Digital Influencer Attractiveness, Homophily and Credibility on Followers' Purchase Intention. *Issues In Information Systems*, 23(1), 86–101. https://doi.org/10.48009/1_iis_2022_107

Schermelleh-Engel, K., Moosbrugger, H., & Müller, H. (2003). *Evaluating the Fit of Structural Equation Models: Tests of Significance and Descriptive Goodness-of-Fit Measures*. Department of Psychology - University of Koblenz-Landau. https://doi.org/10.23668/PSYCHARCHIVES.12784

Shah, S. A., Shoukat, M. H., Jamal, W., & Shakil Ahmad, M. (2023). What Drives Followers-Influencer Intention in Influencer Marketing? The Perspectives of Emotional Attachment and Quality of Information. *Sage Open*, 13(2), 21582440231179712. https://doi.org/10.1177/21582440231179712

Shahid, S., Paul, J., Gilal, F. G., & Ansari, S. (2022). The role of sensory marketing and brand experience in building emotional attachment and brand loyalty in luxury retail stores. *Psychology & Marketing*, 39(7), 1398–1412. https://doi.org/10.1002/mar.21661

Shamim, K., & Islam, T. (2022). Digital influencer marketing: How message credibility and media credibility affect trust and impulsive buying. *Journal of Global Scholars of Marketing Science*, 32(4), 601–626. https://doi.org/10.1080/21639159.2022.2052342

Sharma, M., Kaushal, D., & Joshi, S. (2023). Adverse effect of social media on generation Z user's behavior: Government information support as a moderating variable. *Journal of Retailing and Consumer Services*, 72, 103256. https://doi.org/10.1016/j.jretconser.2023.103256

Silva, M. J. D. B., Farias, S. A. D., Grigg, M. K., & Barbosa, M. D. L. D. A. (2020). Online Engagement and the Role of Digital Influencers in Product Endorsement on Instagram**. *Journal of Relationship Marketing*, 19(2), 133–163. https://doi.org/10.1080/15332667.2019.1664872

Silva, R., Sampaio, A., & Rodrigues, P. (2019). The Role of Digital Influencers on Buying Intention. In A. Rocha, J. L. Reis, K. M. Peter, & Z. Bogdanović (Eds.), *Marketing and Smart Technologies* (pp. 137–144). Springer.

Sirdeshmukh, D., Singh, J., & Sabol, B. (2002). Consumer Trust, Value, and Loyalty in Relational Exchanges. *Journal of Marketing*, 66(1), 15–37. https://doi.org/10.1509/jmkg.66.1.15.18449

Sokolova, K., & Kefi, H. (2020). Instagram** and YouTube bloggers promote it, why should I buy? How credibility and parasocial interaction influence purchase intentions. *Journal of Retailing and Consumer Services*, 53, 101742. https://doi.org/10.1016/j.jretconser.2019.01.011

Sookkaew, J., & Saephoo, P. (2021). "Digital Influencer": Development and Coexistence with Digital Social Groups. *International Journal of Advanced Computer Science and Applications*, 12(12). https://doi.org/10.14569/IJACSA.2021.0121243

Stern, H. (1962). The Significance of Impulse Buying Today. *Journal of Marketing*, 26(2), 59–62. https://doi.org/10.1177/002224296202600212

Stubb, C., Nyström, A.-G., & Colliander, J. (2019). Influencer marketing: The impact of disclosing sponsorship compensation justification on sponsored content effectiveness. *Journal of Communication Management*, 23(2), 109–122. https://doi.org/10.1108/JCOM-11-2018-0119

Sumetha, M., & Vasanthi, S. (2016). Factors Affecting Online Impulsive Buying Behavior. *Academy and Society*, 2(2), 28–31.

Tabachnick, B. G., & Fidell, L. S. (2013). *Using Multivariate Statistics* (6th ed.). Pearson.

Thomson, M., MacInnis, D. J., & Whan Park, C. (2005). The Ties That Bind: Measuring the Strength of Consumers' Emotional Attachments to Brands. *Journal of Consumer Psychology*, 15(1), 77–91. https://doi.org/10.1207/s15327663jcp1501_10

Torlak, Ö., & Tiltay, M. A. (2010). Anlık satınalma ölçeklerinin Türk tüketicisi için uyarlanmasına yönelik bir deneme [An attempt to adapt impulse buying scales for Turkish consumers]. *Ulusal Pazarlama Kongresi [National Marketing Congress]*, 406-423. (In Turkish).

Torres, P., Augusto, M., & Matos, M. (2019). Antecedents and outcomes of digital influencer endorsement: An exploratory study. *Psychology & Marketing*, 36(12), 1267–1276. https://doi.org/10.1002/mar.21274

Turgut, H. (2021). Istanbul: The city as an urban palimpsest. *Cities*, 112, 103131. https://doi.org/10.1016/j.cities.2021.103131

Venkatesh, N., & Renuka, P. (2019). Study on Impulse Buying Behavior of Jntuh Students. *EPRA International Journal of Multidisciplinary Research*, 5(3), 198–202.

Vrontis, D., Makrides, A., Christofi, M., & Thrassou, A. (2021). Social media influencer marketing: A systematic review, integrative framework and future research agenda. *International Journal of Consumer Studies*, 45(4), 617–644. https://doi.org/10.1111/ijcs.12647

Weismueller, J., Harrigan, P., Wang, S., & Soutar, G. N. (2020). Influencer Endorsements: How Advertising Disclosure and Source Credibility Affect Consumer Purchase Intention on Social Media. *Australasian Marketing Journal*, 28(4), 160–170. https://doi.org/10.1016/j.ausmj.2020.03.002

Wu, I.-L., Chen, K.-W., & Chiu, M.-L. (2016). Defining key drivers of online impulse purchasing: A perspective of both impulse shoppers and system users. *International Journal of Information Management*, 36(3), 284–296. https://doi.org/10.1016/j.ijinfomgt.2015.11.015

Xiao, M., Wang, R., & Chan-Olmsted, S. (2018). Factors affecting YouTube influencer marketing credibility: A heuristic-systematic model. *Journal of Media Business Studies*, 15(3), 188–213. https://doi.org/10.1080/16522354.2018.1501146

Yeşilyurt, Ö. (2018). *Sağlık İşletmesinde Algılanan Hizmet Kalitesi, Algılanan Risk ve Algılanan Değer Boyutlarının Hasta Memnuniyeti ve Davranışsal Niyeti Üzerine Etkisinin Yapısal Eşitlik Modeli ile Değerlendirilmesi [Evaluation of the Effect of Perceived Service Quality, Perceived Risk and Perceived Value Dimensions on Patient Satisfaction and Behavioral Intention in Healthcare Business with Structural Equation Model]* [PhD Thesis]. Selçuk Üniversitesi, Sosyal Bilimler Enstitüsü. (In Turkish).

Zafar, A. U., Qiu, J., Li, Y., Wang, J., & Shahzad, M. (2021). The impact of social media celebrities' posts and contextual interactions on impulse buying in social commerce. *Computers in Human Behavior*, 115, 106178. https://doi.org/10.1016/j.chb.2019.106178

Zatwarnicka-Madura, B., Nowacki, R., & Wojciechowska, I. (2022). Influencer Marketing as a Tool in Modern Communication—Possibilities of Use in Green Energy Promotion amongst Poland's Generation Z. *Energies*, 15(18), 6570. https://doi.org/10.3390/en15186570

** – A social network owned by "Meta", which is recognized as extremist in Russia